Part	Picture	Qty.
A		6
B		1
C		1
D		1
E		1

1

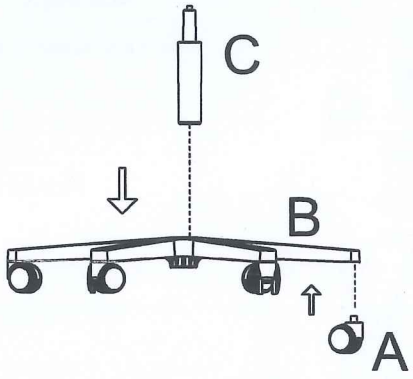

2

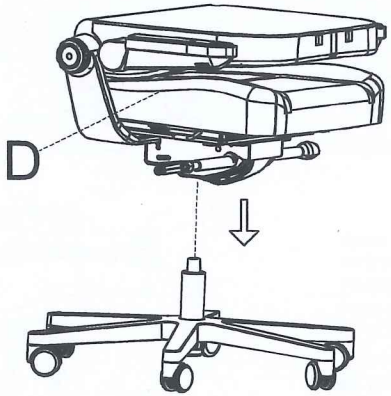

3

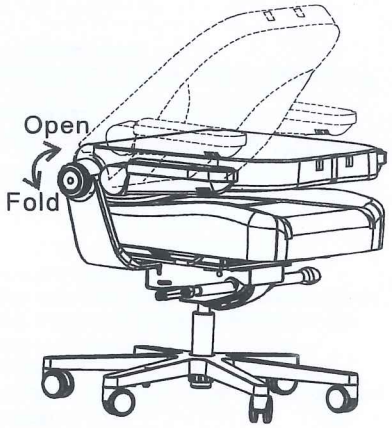

4

5